500 kHz, 1.4mA Instrumentation Amplifier

Features

- Rail-to-Rail Input and Output
- Gain Set by 2 External Resistors
- Gain=1 stable; Other minimum gain options selectable. (2, 5, 10 or 100 V/V)
- Common Mode Rejection Ratio (CMRR):
  100 dB (Max.).
- Power Supply Rejection Ratio (PSRR):
  110 dB (Max.).
- Bandwidth: 550 kHz (typical, Gain=1)
- Supply Current:
  1.75mA/channel (5V)
  1.45mA/channel (1.8V)
- Single Channel
- Enable/V_{OS} Calibration pin: (EN/$\overline{CAL}$)
- Power Supply: 1.8V to 5.5V
- Extended Temperature Range: -40℃ to +125℃

Applications

- High Side Current Sensor
- Wheatstone Bridge Sensors
- Difference Amplifier with Level Shifting
- Power Control Loops

Description

ChipNext technology offers the single CN3611 instrumentation amplifier (INA) with offset calibration pin, the calibration function can be trigged both by Enable pin and power supply up. This part is optimized for single-supply operation with rail-to-rail input (no common mode crossover distortion) and output performance.

CN3611 uses two external resistors to set the close loop voltage gain. It has excellent noise and temperature-shift performance. The reference voltage (VREF) shifts the output voltage (VOUT). The supply voltage range (1.8V to 5.5V) is large enough to support many portable applications. All devices are fully specified from -40°C to +125°C.

Minimum gain options is 1 V/V for this part. Other minimum gain is selectable (2, 5, 10 and 100 V/V). This allows the user to optimize the input offset voltage and input noise for different applications.

Typical Application Circuit

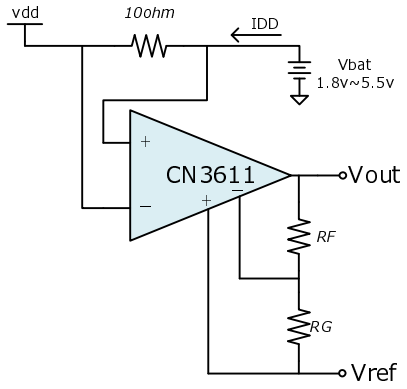

Block Diagram